POWER FACTOR CONTROLLER

MODEL - PFC9055

INDUSTRIAL CONTROLS & DRIVES (INDIA) PVT. LIMITED
New No: 33 Old No:10, Mettukuppam Road, (via) Alapakkam Road,
Maduravoyal, Chennai - 600 095.
Website: www.icdipl.com e-mail : gcicdipl@vsnl.com

INDEX

POWER FACTOR CONTROLLER

1.General Features

The Power Factor Controller PFC 9055 measures the power factor (cosϕ) and reactive power (kVAr) of power system and displays them on a digital display. The power factor controller performs the automatic connection and disconnection of capacitors in function of the power factor and set point programmed.

Designed with latest state of art technology using micro controller, the power factor controller becomes an intelligent equipment, able to accurately measure the power factor and to take complex decisions for switching on/off the capacitors.

The power factor controller performs the true R.M.S measurement of reactive power and power factor including harmonics. The power measurement is done for the full four quadrants. The power factor is displayed on a 12.5 mm high visibility red LED display. Four keys are provided on the front panel for programming purpose.

The power factor controller is provided with 12 output relays with the possibility of an additional alarm relay. The power factor controller is housed in a PVC enclosure with the dimension of 144(H)x144(W)x150(D) mm

Installation

General consideration

The meter is panel mountable and fits into a cut out of **138 X 138 mm** dimension. Place the meter through the panel cut out and fix the mounting clamps provided with the meter on each side of the meter. Tighten the fixing clamps with limit amount of force so as to hold the meter firmly.

The power factor controller is used to measure power factor, when mounted in instrument panels and is to be installed only by trained electricians and technicians. The PT's and CT's used for measurement should be of instrument class 1 or better for accurate measurement results. Also PT's and CT's should have adequate VA rating to support the burden on the secondaries.

The power factor controller must be protected by the fuses in each voltage circuits. The current circuits must be provided with CT shorting blocks to reduce the possibility of accidental disconnection. The CT connections of the meter must not be disconnected while current is flowing in the primary of the CT.

2. ALARM FUNCTIONS

ALARM - 01 = UNDER COMPENSATION

After all outputs are ON, required kVAr(Lag) **>** 70% of 1st capacitor value, the alarm LED will be ON and the display shows **ALr 01**

ALARM - 02 = OVER COMPENSATION

After all outputs are OFF, required kVAr(Lead) **>** 70% of 1st capacitor value, the alarm relay will be ON and the display shows **ALr 02**

ALARM - 03 = OVER VOLTAGE PROTECTION

Phase voltage **>** 115% of rated voltage, the alarm LED will be ON & step output are switched OFF and the display shows **ALr 3r / y/ b** R, Y, B.

ALARM - 04 = OVER CURRENT PROTECTION

Phase current **>** 110% of rated current, the alarm relay will be ON, step relays are switched OFF and the display shows **ALr 4 r / y / b.**

Note

Index (#) key is used to acknowledge the alarm relay.

NO 1	Output Relay - 1	NO 7	Output Relay 7
NO 2	Output Relay – 2	NO 8	Output Relay 8
NO 3	Output Relay – 3	NO 9	Output Relay 9
NO 4	Output Relay – 4	NO 10	Output Relay 10
NO 5	Output Relay – 5	NO 11	Output Relay 11
NO 6	Output Relay – 6	NO 12	Output Relay 12

COM - Relay common for 1 to 6

COM- relay common for 7 to 12

NC P NO relay contacts for Alarm

UPPER TERMINALS

R
Y
B
N
M
IR
L

Three phase voltage input
415 VAC For LT meters
110 VAC For HT meters

M
IY
L

Three phase current input
from external CT's (1/5 A)

M
IB
L

Voltage Signal connections

The power factor controller can accept voltages upto 415 VAC R.M.S +10% to – 20% in case of LT meters and 110 VAC R.M.S +10% to – 20% in case of HT meters. The voltage input terminals has a burden on auxiliary power supply less than 10VA.

Current signal connections

The power factor controller is provided with current input terminals to accept 1/5 A R.M.S from external CT's. The CT secondary value is not field programmable and has to be specified at the time of ordering. The current inputs has a overload capability of 120% and has a burden on less than 0.5VA per phase.

The CT must be placed at any point on the entrance of the power system where the whole current consumed by both load and capacitors can be measured.

Right connection

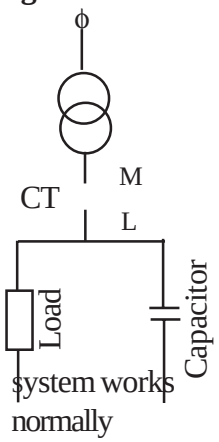

system works normally

Wrong connection

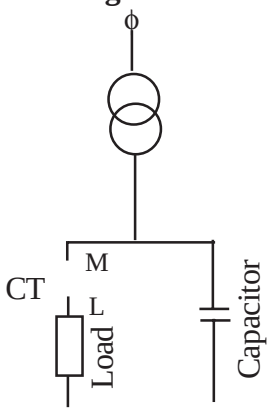

All the capacitors are connected. The power system may be over compensated

Wrong connection

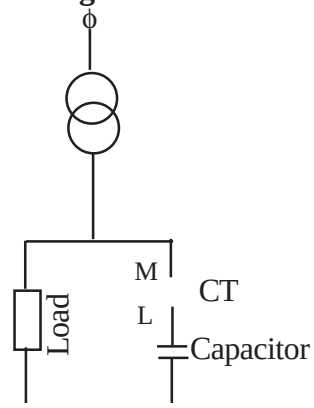

None of the capacitors are connected - No compensation for PF

3. Wiring diagram for various types of systems

a) **Three phase four wire LT systems** (3 watt meter measurement)

Voltage Input : 415V AC RMS (L-L) (-20% to +10%)

Current Input : 5/1A provide through 3 CT's

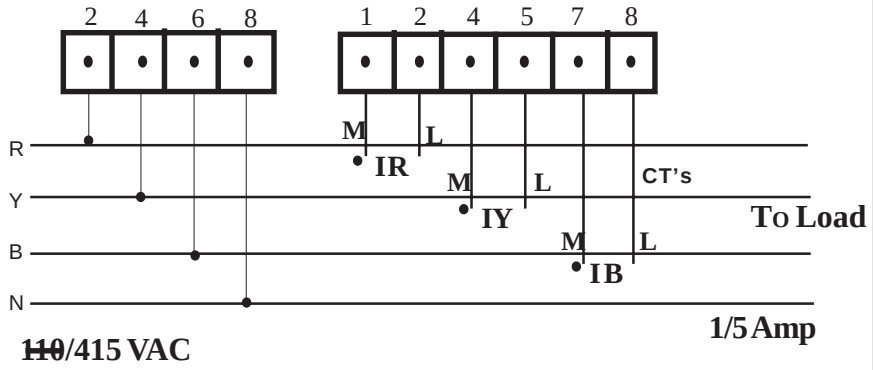

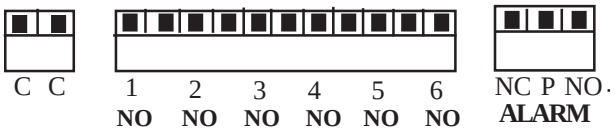

Wiring Diagram

b) Three phase four wire HT systems (3 watt meter measurement)

Voltage Input : 110V AC RMS (L-L) (-20% to +10%)
Current Input : 5/1A provided through 3 CT's

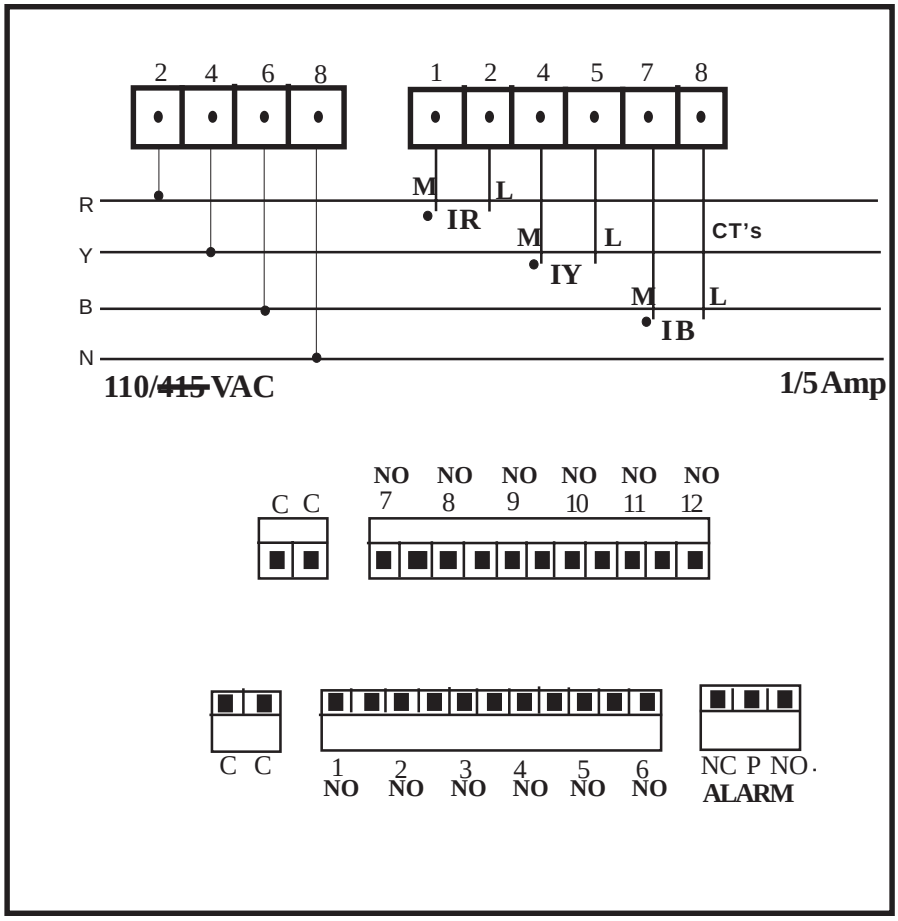

Wiring Diagram

C) Three phase three wire HT systems (2 watt meter measurement)

Voltage Input : 110 VAC (L - L)(Through PT)
Current input : 5/1A provided through 2 CT's

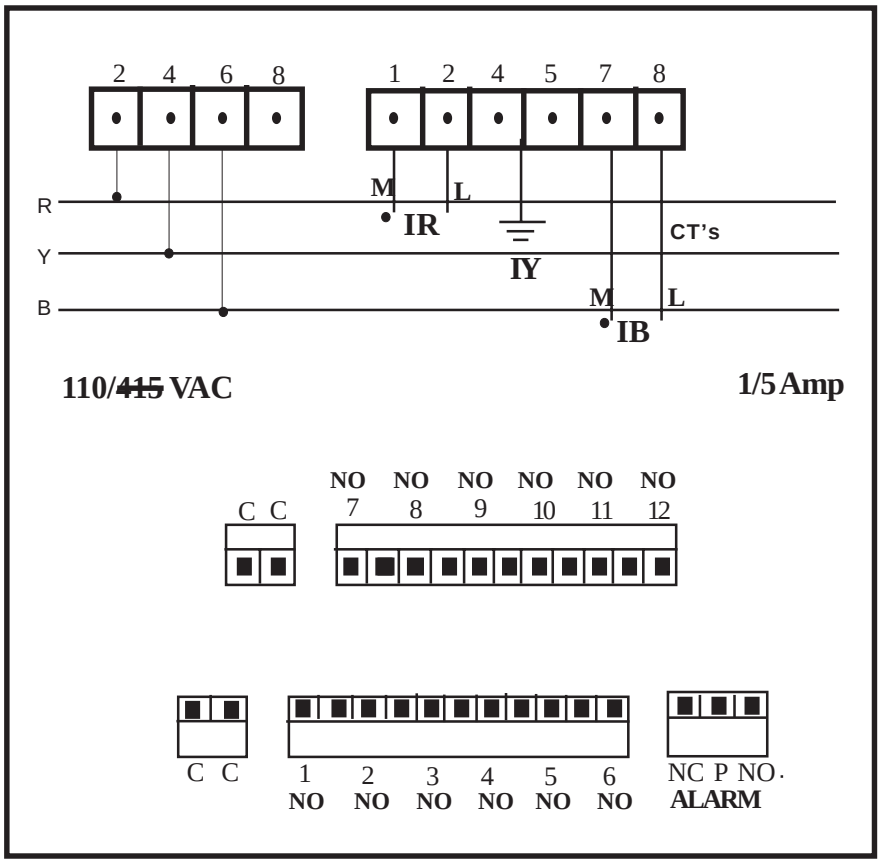

Cross checking the wiring

The three phase voltage wiring and current wiring are to be properly done for the correct measurement. Any wrong connections done either during installation or rewiring can produce wrong measurement.

The reverse condition occurs when the voltages R,Y & B are not connected in proper sequence and also when the respective current is not given according to its respective voltage.

To avoid any accidental wrong connections the PFC 9055 is provided with a connection diagnostic page of display. If the display shows Ct niL then there is no reverse flow otherwise the reversed phase is shown. While checking the reverse condition, make sure that the load current is more than 5% of full load current.

Relay Output Connections

The power factor controller connects/disconnects the capacitors through output relays. The relays are rated for 3A at 240 VAC. So proper contactors are to be used for switching the capacitors.

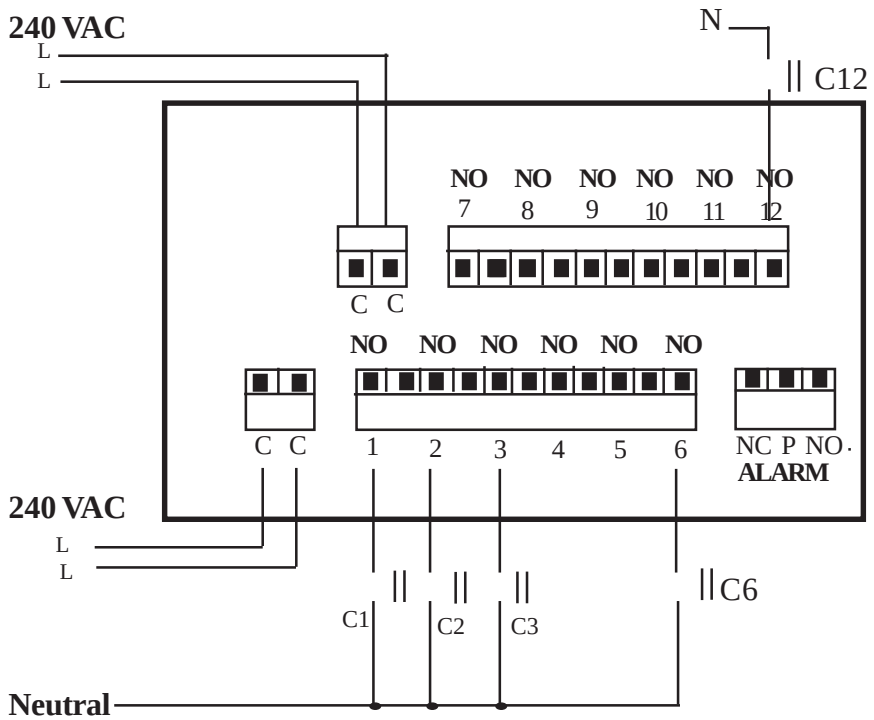

C1 - C12 are the coils of the contactors to which the capacitors are connected. The coils are energised through 240 VAC supply via the output relays.

It is recommended to connect the common supply for the output relays through four individual wires and also from a separate power source especially not from ‘ R’ phase and also not from the terminal blocks of PFC 9055.

4. FRONT PANEL FEAUTURE

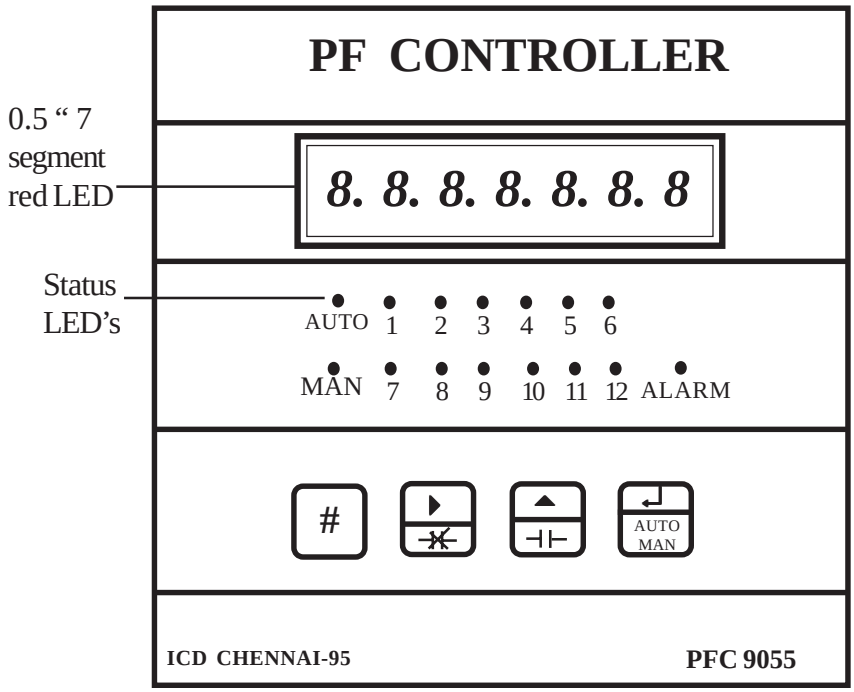

The display is a 0.5" 7 segment red LED. The LED display shows power factor, Actual kVAr, Target kVAr, Alarm status (Alr 01/Alr 02/Alr 3r/y/b/Alr 4r/y/b) and CT polarity status.

The key pad consists of four key namely index, shift, increment and enter key. These keys are used to program various control parameters and switch on/off the capacitors in manual mode.

The AUTO/MANUAL LED is illuminated according to the mode of control selected. The relay on LED 1 to 12 are illuminated whenever the corresponding relay is switched on.

.

5. Control operations

The power factor controller is provided with two type of control modes namely Auto mode and Manual mode. The control mode is selected by pressing ↵ Auto/man key in run mode. The AUTO or MAN LED illuminates according to the mode of control selected.

Auto mode

The power factor controller calculates the reactive power (kVAr) and power factor (cosϕ) from the voltage and current inputs. It also computes the reactive power necessary for the target PF. When required reactive power exceeds the 70% of kVAr **(lag)** value of the smallest capacitor in the network, the capacitor stages are automatically connected. Similarly when the required reactive power exceeds the 70% of kVAr **(lead)** value of the smallest capacitor in the network, the capacitor stages are automatically disconnected.

The capacitor connection/reconnection delay time of 5 to 240 seconds is provided to allow sufficient time delay for switching on/off the capacitors in the compensation network. This feature avoids hunting especially in highly fluctuating loads and also allow the capacitors to discharge properly before connecting them again in the network. The delay time has to be properly chosen according to the load and design of capacitor network.

Manual mode

In manual operation, the capacitor banks can be connected/disconnected irrespective of system power factor and setting. The capacitors are disconnected by pressing key. The capacitors are connected by pressing key. A delay time of 5 seconds is permanently provided for the connection/disconnection of the capacitors.

6. Programming Instructions

The power factor controller is provided with four keys for programming purpose. The various functions of the keys are given below

	Program mode	Automode	Manual mode
#	Index key	To select P.F, kVar, Target kVAr, CT, Alarm status & Alarm acknowledge	→ -DO-
	Shift key	Not applicable	Switch off capactors
	Increment key	Not applicable	Switch on capacitors
↵ AUTO MAN	Enter key	To Select Auto mode	To select manual mode

All power factor controllers are to be programmed properly to work in a particular installation. The various items that are to be programmed are shown in the table below.

Run mode display pages

Press # key one by one, run mode display pages as follows:

Page 1 - Ld 0.51 —— Power factor

Page 2 - q.692.4 —— Actual total kVAr

Page 3 - r.832.4 —— Target/required kVAr

Page 4 - CT nil —— CT/PT polarity status

Page 5 - Alr 01 —— Alarm status

The power factor controller is provided with pass word facility to prevent alteration of configuration items by unauthorised persons. The configuration items can be changed by following the sequence given below.

With power applied to the meter, press & keys together for three seconds. The display indicates enter pass word as EP- - - -

The valid pass word set in configuration item new pass word has to be entered by using shift, increment and enter keys (refer changing the configuration items for using shift, increment and enter keys). After valid pass word is entered the meter enters into program mode by showing it in display as P r o g

Note: If the user enters the enter pass word for the first time, or if the user fails to remember the pass word set in new pass word, the default pass word **'0386'** can be entered.

In program mode, the configuration items can be selected by pressing the index (#) key. The heading displays are used to differentiate the various configuration items.

7. The heading display pages for various configuration items are given below.

PRESS ▸ & ▲ KEYS TOGETHER

EP - - - Enter pass word

Prog Program mode

PRESS # KEY

nP0000 Pass word to prevent unauthorised persons entry

PRESS # KEY

SP-0.99 Target power factor setting (Lag 0.80 to lead 0.95)

PRESS # KEY

Cd 008 Time delay for connection / disconnection of capacitors (Range : 5 - 240 secs.)

PRESS # KEY

rCd 010 Time delay for reconnection (Range : 5 - 240 secs.)

PRESS # KEY

Ct 1000 Primary current setting

PRESS # KEY

CL005.0 Kvar value of the smallest capacitor in the compensation - network

OP1.1.1.1.1 1.2.4.8.8)

PRESS # KEY

nC 12 Total number of capacitors in the compensation network

Changing the configuration items

After selecting the configuration item through index key, they can be altered by using shift, increment and enter keys.

The shift key is ▸ is used to select the digit one by one. The selected digit is shown by flashing that digit. In set point and number of capacitors mode the shift key is used to decrement the value by one.

The increment key ▲ is used to increment the selected digit.

The increment key increments the digit from 0 to 9 and then wraps down to 0 once again. In setpoint and number of capacitors mode, the increment key is used to increment the values by one. Once the required values are set in the configuration items press the enter key to store it in the memory. If the change is accepted the display indicates E otherwise an error message is displayed as Err. When number of capacitors and oprating sequence are altered, the controller restarts again.

Once the configuration items are programmed hold in the ▸ & ▲ keys together for 3 seconds to come back to normal operating mode.

8. TECHINICAL SPECIFICATION

Type	**: ICD MAKE MICROCONTROLLER BASED POWER FACTOR CONTROLLER**
Model	**: PFC 9055**
Voltage Circuit	
Rated voltage	**:** 415 V AC 3 phase R, Y & B phase for LT 110 VAC 3 phase R, Y & B phase for HT
Tolerance	**:** -20% to 10%
Frequency	**:** 40.00 to 60.00 Hz
Current Circuit	
Rated current	**:** 1A/5A 3phase, R,Y & B
Burden	: Less than 0.5VA
Isolation	**:** available through CT
Power Factor Measurement	
1) Un- balanced load	**:** From a 3phase voltage & 3 phase current PF is computed
2) Balanced load	**:** Using line to line voltage and current, PF is computed
Indicating accuracy (PF)	**:** ± 1% of reading + 2 least digit
Display parameter	**:** Average P.F, Total kVAr, kVar required to reach target P.F, CT NIL & Alarm status

Indicating Resolution	: 0.01 PF
Lead & lag indication	: Available - shown on display
Reverse polarity indication	: Shown on the display to correct voltage and current polarity
Control PF setting	: 0.80 Lag to 0.95 Lead
Output Relays	: 4/6/8/12 steps
Capacitor Connection delay	: 5 - 240 seconds (adjustable)
Capacitor reconnection delay	: 5 - 240 seconds (adjustable)
Control Sensitivity	: The step output added when required kVAr in lag more than 70%of the first capacitor bank, to attain preset COSØ and is removed when required kVAr in lead more then 70% of first capactitor bank
Keypad for settings and selections	: Index, increment, shift & Enter keys for P.F setttings, delay setting and auto manual operation.
Protection	: Available against a) Over voltage 115% of the rated voltage (Alr 3r/y/b) b) Over current 110 % of the rated current (Alr 4r/y/b) c) Over compensation (Alr 02) d) Under compensation (Alr 01)

Alaram relay output conditions	: For the above protection aralm relay is ON
Output Relay	: NO contact for each step
Contact rating	: 3A at 230VAC
Relay ON indication	: By LED lamps
Auto/manual selection	: Available
Auto/manual indication	: By LED
Manual selection of cap.banks	: Through keypad
Rating humidity & temperature 55deg.celcius	: 90% Rh at 25deg. &
Enclosure dimension mm	: 144(H) x 144(W) x 150(D)