PF CONTROLLER

MODEL: PFC 9070

INDUSTRIAL CONTROLS & DRIVES (INDIA) PVT. LIMITED
New No: 33 Old No:10, Mettukuppam Road, (via) Alapakkam Road,
Maduravoyal, Chennai - 600 095.
Website: www.icdipl.net, e-mail :sales@icdipl.net

INDEX

POWER FACTOR CONTROLLER

1. General Description

The Power Factor Controller PFC 9070 measures grid power parameters from grid PT & CT input, and measures the panel power parameters from panel PT & panel CT and display them through LCD display. The power factor controller performs the automatic connection and disconnection of capacitor in function of the power factor and set point programmed.

The PFC is designed with latest state of art technology using micro controller, the power factor controller becomes an intelligent equipment, able to accurately measure the power factor and to take complex decisions for switching ON/OFF the capacitors.

The power factor controller performs the true R.M.S measurement of reactive power and power factor including harmonics. The power measurement is done for the full four quadrants. The power parameter is displayed in 4 row 16 character LCD display. Eight keys are provided on the front panel to view various parameter & programming purpose.

The power factor controller shows parameters in run mode has four catagories

2. Parameters

1. Grid parameter
2. Panel parameter
3. Alarm Status
4. Step History

Grid parameter:

PFC receive three phase voltage and three phase current input from grid, for Grid parameter measurement and it is displayed through LCD display as follows.

1. PF (Instant cos ϕ)
2. Set PF (Target cosϕ)
3. Required kVAr
4. KVAh
5. KWh
6. Avg.PF
7. KVArh LG & LD
8. Total and Individual KVA
9. Total and Individual KW
10. Total and Individual KVAr
11. Voltage
12. Current
13. Frequency
14. Votage & Current THD

Panel Parameter:

PFC receive three phase voltage and three phase current input from panel, for panel parameter measurement and it is displayed through LCD display as three phase parameters.

1. Total and Individual KVAr
2. KVArh LG & LD
3. Individual Phase current and Avg current
4. Line Voltage
5. Phase Voltage.

Alarm Status:

Alarm is clasiffied in to two types

1. ALr01: Critical Alarm
2. ALr02: Non Critical Alarm.

1.Critical Alarm:(ALr01)

The critical alarm (ALR01) comes for following abnormal conditions.

a) Over Voltage : (102-120% of rated voltage)

Grid voltage is more than over voltage % set for 30 sec continuously, over voltage alarm will come. It will retrive at 5% of rated voltage is less than over voltage set for 30 sec continuously.

b) Over Current: (100-120% at rated current)

Grid current is more than over current % setting for 30 sec continuously , over current alarm will come. It will retrive at 5% of rated current is less than over current % setting.

c) Zero Current: (0.4% of rated current)

Grid current is less than 0.4% of rated current for 3 sec continuously, zero current alarm will come. it will retrive at grid current is more than 0.4% at rated current for 3 sec continuously.

d) Zero Voltage:

Grid voltage is less than 275 V for 3 sec continuously, zero voltage alarm will come.It will retrive at grid voltage more than 300 V for 3 sec continuously.

2. Non Critical Alarm:(ALr02)

Non critical alarms, will come under the following abnormal condition.

a) Over Compensation:

After all relay's are OFF, requried kVAr (lead -Ve) > 70% of 1st capacitor value in Lead, the alarm will be ON.

b) Under Compensation:

After all relay's are ON, requried kVAr (Lag +Ve) > 70% of 1st capacitor value in Lag, the alarm will be ON.

c) Voltage THD:

Percentage of voltage THD harmonic content is more than voltage THD setting this alarm will come.

d) Current THD:

Percentage of current THD harmonic content is more than current THD setting this alarm will come.

Note:

Capacitor bank operation is not affected for non critical conditions.

Step History :

PF controller is monitoring and record the performance of each step, based on following aspects and display it for each step in individual page.

1.Cycle count : NO of ON/OFF cycle.
2.Run Hour : Total duration capacitor bank is ON (hrs & min)

Program mode:

Program mode is used to enter various input data to controller to perform control operation effectly.Program mode set-up classiffied in to three types.

1. Metering set -up
2. Control set-up
3. Alarm set-up

Metering set -up:

Metering set-up input data are used to perform measurement of grid and panel power parameters.

1. Operating voltage (350V - 525V)
2. Grid primary current (0000 - 9999)
3. Panel primary current (0000 - 9999)
4. LCD Power save mode (Enable/disable)
5. Energy reset sure .

Control set-up:

Control set-up input data are used to perform control operation of re-active power consumption using capacitor bank step.

1. PF set point (0.80LG to 0.91 LD)
2. Connection Delay (00 to 99 sec)
3. Reconnection Delay (000 to 999 sec)
4. Number of Banks (01 to 16)
5. Rating of 1st capacitor bank (00.0 to 99.9 KVAr)
6. Operation Sequence
   1 :1 :1 :1 :1
   1 :1 :2 :2 :2
   1 :2 :2 :2 :2
   1 :2 :4 :4 :4
   1 :2 :4 :8 :8
7. Bank History reset (01 to 16)

Alarm set-up:

Alarm set-up input data are used to give indication and relay output for fault condition.

1. Over Voltage Set (102-120%)
2. Over Current Set (100-120%)
3. Voltage THD (0 - 20%)
4. Current THD (0 - 50%)

3. Installation:

3.1 General consideration

The meter is panel mountable and fits into a cut out of 138X 138 mm dimension. Place the meter through the panel cut out and fix the mounting clamps provided with the meter on each side of the meter. tighten the fixing clamps with limit amount of force so as to hold the meter firm.

The power factor controller is used to measure power factor, when mounted in instrument panels and is to be installed only by trained electricians and technicians. The PT's and CT's used for measurement should be of instrument class 0.5 or better for accurate measurement results. Also PT's and CT's should have adequate VA rating to support the burden on the secondaries.

The current circuits must be provided with CT shorting blocks to reduce the possibility of accidental disconnection.The CT connections of the meter must not be disconnected while current is flowing in the primary of the CT.

3.2 Current signal connections

The power factor controller is provided with current input terminal to accept 1 / 5 A R.M.S from external CT's.The CT secondary value is not field programmable and has to be specified at the time of ordering.The current inputs has a overload capability of 120% and has a burden of 0.1VA per phase.

The CT must be placed at any point on the entrance of the power system where the whole current consumed by both load and capacitors can be measured.

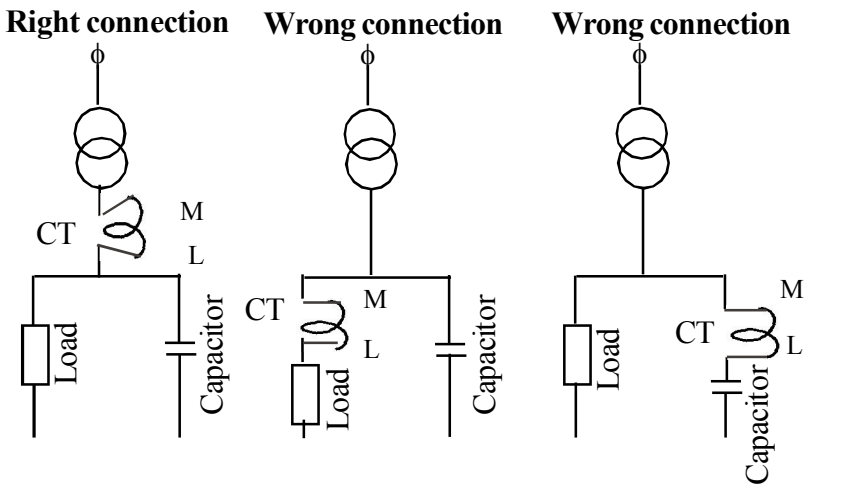

system works normally

All the capacitors are connected. The power system may be over compensated

None of the capacitors are connected - No compensation for PF

3.3) Auxiliary power supply connections

The Meter derives power from auxiliary power supply terminals which is seperatly provided in the meter. SMPS circuit is used to power up the meter so it can work from th range of 90 - 270V AC RMS. The auxiliary supply should be connected to proper specified voltage.

Burden on Auxiliary supply terminals : 4VA

3.4 Wiring Diagram:

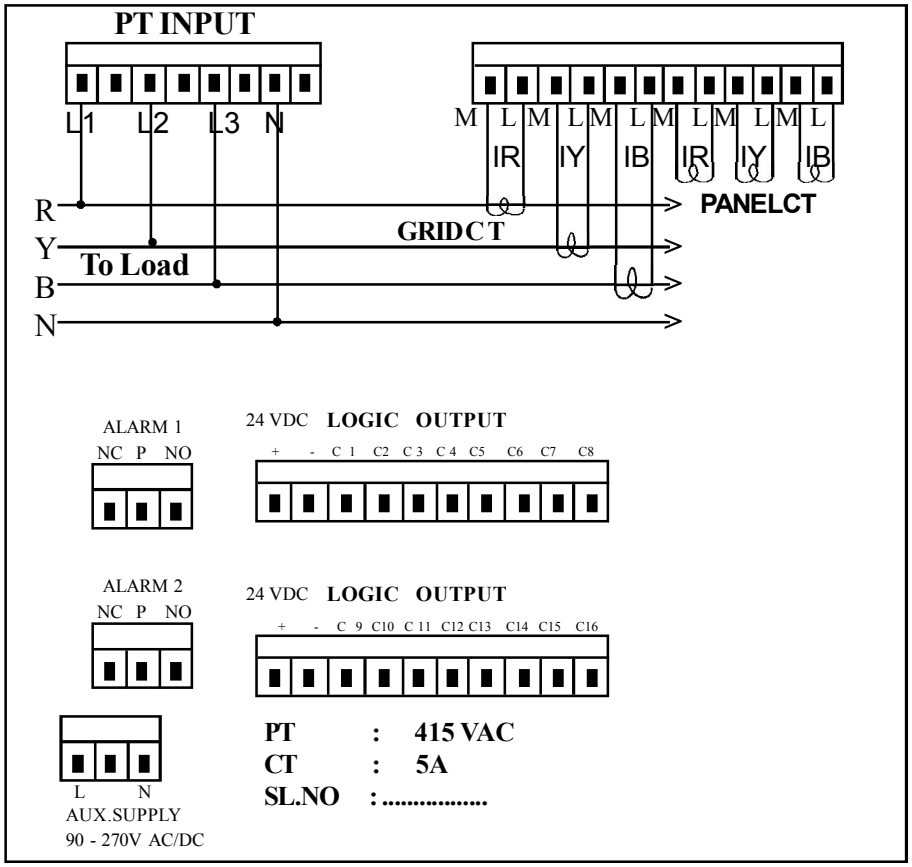

4. Front Panel Features

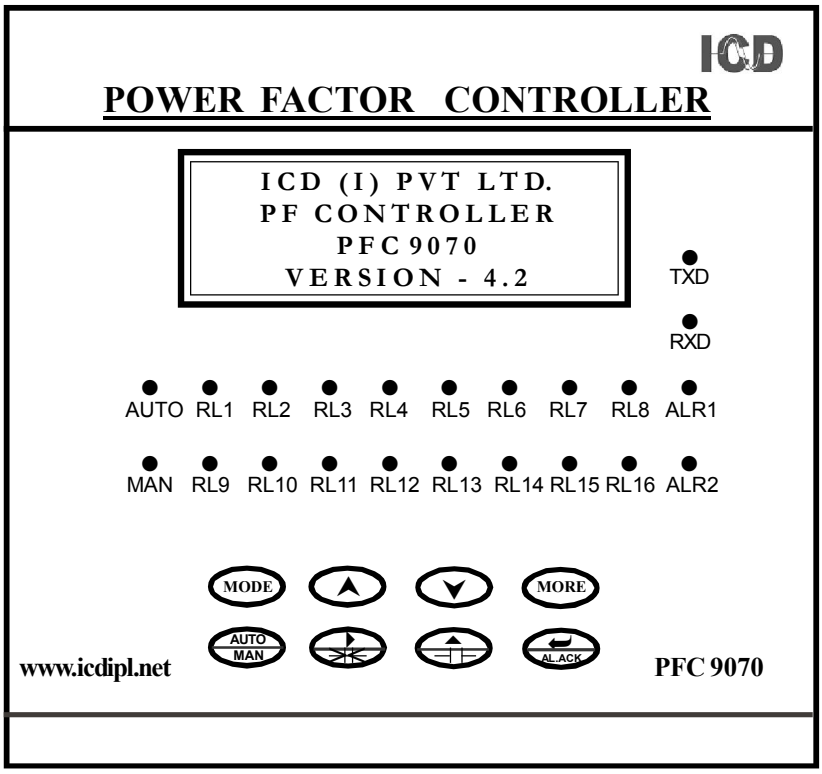

The display is 4 row 16 character LCD to show all the parameter and program mode setting.

The key pad consists of eight key namely mode,page up page down,auto/manual,shift/capacitor remove,increment,capacitor add ,Enter/ALR.ACK. These keys are used to program various control parameters and switch on/off the capacitors in manual mode.

The auto, manual & Alarm LED is illuminated according to the mode of control selected.

5. Control operations:

The power factor controller is provided with two type of control modes namely Auto mode and Manual mode.The control mode is selected by pressing AUTO/MAN key in run mode.

The auto or man LED illuminates according to the mode of control selected.

Auto Control operation mode:

The power factor controller measure the reactive power (kVAr) and power factor (cosϕ) from the voltage and current inputs. It also computes the reactive power necessary for the target PF. When required lag reactive power exceeds the 70% kVAr value of the first capacitor in the network, the capacitor stages are automatically connected. Similarly when the required lead reactive power exceeds 70% kVAr value of the smallest capacitor in the network, the capacitor stages are automatically disconnected.

In order to get uniform utilisation of automatic capacitor banks, the controller keeps in memory the on and off sequences of capacitors. So when a capacitor is required to be connected, the capacitor that is switched off for the longest time is turned on.

The capacitor connection delay time 1 to 99sec counts is provided to allow required time delay for switching on/off thecapacitors in the compensation network.

Manual control operation mode:

In manual operation, the capacitor banks can be connected/ disconnected irrespective of system power factor and setting.The capacitors are connected by pressing key.

The capacitors are disconnected by pressing key. A delay time of 5 seconds is permanently provided for the connection/ disconnection of the capacitor.

6. Programming Instructions:

The power factor controller is provided with eight keys for programming purpose. The various functions of the keys are given below

Mode	Program mode	Automode	Manual mode
MODE Mode Key			
	To select the metering set up, control setup,& alarm setup pages.	To select the parameters alarm setup, step history & grid parameters	To select the parameter alarm setup,step history & grid parameter
▲ Incerment Key			
	Used to select the sub parameters of, metering setup, control setup & alarm setup pages as in increment manner	When ▲ key is pressed it will shows the all sub parameters of grid, panel parameters & step history	When ▲ key is pressed it will shows the all sub parameters of grid, panel parameters & step history
▼ Decrement key			
	To select the sub parameters of metering setup,control setup,& alarm setup in decrement manner	When ▼ key is pressed the display shows decrement manner of above said parameters	When ▼ key is pressed the display shows decrement manner of above said parameters

Program mode	Automode	Manual mode
more key	When more key is pressed the display shows individual KVAr values of panel parameters reactive current, target reactive current, generated set points for control lead, Avg pf, harmonics values of grid parameters	When more key is pressed the display shows individual KVAr values of panel parameters reactive current, target reactive current, generated set points for control lead, Avg pf, harmonics values of grid parameters
-------		
AUTO MAN	Automatic key with led indication	Automatic key with led indication
To select the numeric one by one digits of sub parameters value of metering setup,alarm set-up and control set-up.	----------	Switch OFF capacitor
To increment the(▲) selected digit	----------	Switch ON capacitor
AL.ACK Entering key to enter the selected values	----------	Alarm acknowledge key

6.1Changing the configuration items

Manual

After selecting the configuration item through index key, they can be altered by using shift, increment and enter keys.

The shift key is used to select the digit one by one. The selected digit is shown by flashing that digit. In set point and number of capacitors mode the shift key is used to decrement the value by one.

The increment key is used to increment the selected digit.The increment key increments the digit from 0 to 9 and then wraps down to 0 once again. In setpoint and number of capacitors mode, the increment key is used to increment the values by one. Once the required values are set in the configuration items press the enter key to store it in the memory. If the change is accepted the display indicates E otherwise an error message is displayed as Err. When number of capacitors is altered, the controller restarts again.

Special Note :

*If the user enters the 'Enter pass word' for the first time, or if the user fails to remember the password entered in 'New pass word', the default password **0386** can be entered.*

7. Runmode display pages

Page 1 (Selected Through Mode Key)

GRID PARAMETERS
PF : 0.500 LG
SET PF : 1.00
Qc : 360.2

Measured grid PF,Target PF, required kVAr

MORE KEY →

GRID PARAMETERS
R 0.500 LG
Y 0.500 LG
B 0.500 LG

Individual PF

▲\▼ key

GRID PARAMETERS
LN VOLT : 240.0 V
CURRENT : 1000 A
FREQ : 50.00 HZ

Avg. Phase Voltage, Avg Line Current and Line Frequency

MORE KEY →

GRID PARAMETERS
VOLTAGE
R 240.0 Y 240.0
B 240.0 ε 240.0

Individual phase voltage and Avg. phase votage

MORE KEY →

GRID PARAMETERS
CURRENT
R 1000 Y 1000
B 1000 ε 1000

Individual line current and Avg. line current

▲\▼ key

GRID PARAMETERS
LL VOLT : 415.0 V
CURRENT : 1000 A
FREQ : 50.00 HZ

Avg. Line Voltage, Avg Line Current and Line Frequency

MORE KEY →

GRID PARAMETERS
LINE VOLTAGE
RY 415.0 YB 415.0
BR 415.0 ε 415.0

Individual line voltage and Avg. line votage

MORE KEY →

GRID PARAMETERS
CURRENT
R 1000 Y 1000
B 1000 ε 1000

Individual line current and Avg. line current

▲\▼ key

GRID PARAMETERS
720.2 kVA
360.2 kW
400.2 kVAr

Toatl kVA, kW and kVAr

GRID PARAMETERS
R 240.1 kVA
Y 240.0 kVA
B 240.2 kVA

Individual kVA

MORE KEY →

GRID PARAMETERS
R 120.1 kW
Y 120.0 kW
B 120.2 kW

Individual kW

MORE KEY →

GRID PARAMETERS
R 133.1 kVAr
Y 133.0 kVAr
B 134.2 kVAr

Individual kVAr

▲\▼ key

GRID PARAMETERS
2020.2 kVAh
1011.3 kWh
AVG PF 0. 500

Total accumulated kVAh & kWh energy and Avg. PF

MORE KEY →

GRID PARAMETERS
LG 1241.3kVArh
LD 1652.3kVArh
AVG PF 0. 500

Total accumulated kVArh LAG & LEAD energy and Avg. PF

▲\▼ key

GRID PARAMETERS
R : 240.1V 1000.1A
FUN: 241.2V 1010.2A
THD: 10.2% 20.2%

R voltage and current THD in percentage

MORE KEY →

GRID PARAMETERS
Y : 240.1V 1000.1A
FUN: 241.2V 1010.2A
THD: 10.2% 20.2%

Y voltage and current THD in percentage

MORE KEY →

GRID PARAMETERS
B : 240.1V 1000.1A
FUN: 241.2V 1010.2A
THD: 10.2% 20.2%

B voltage and current THD in percentage

Page 2 (Selected Through Mode Key)

PANEL PARAMETERS
400.2 kVAr
LG 1241.3kVArh
LD 1652.3kVArh

MORE KEY →

PANEL PARAMETERS
R 133.1 kVAr
Y 133.0 kVAr
B 134.2 kVAr

Total accumulated kVArh LAG & LEAD energy and Total kVAr

Individual kVAr

▲\▼ key

PANEL PARAMETERS
CURRENT
R 1000 Y 1000
B 1000 ε 1000

Individual line current and Avg. line current

▲\▼ key

PANEL PARAMETERS
VOLTAGE
R 240.0 Y 240.0
B 240.0 ε 240.0

Individual phase voltage and Avg. phase voltage

▲\▼ key

PANEL PARAMETERS
LINE VOLTAGE
RY 415.0 YB 415.0
BR 415.0 ε 415.0

Individual line voltage and Avg. line voltage

Page 3 (Selected Through Mode Key)

ALARM 1 STATUS **OVER VOLTAGE : NIL** **OVER CURRENT : NIL**	Over voltage and over current alarm (when the instant value exeeds the set value then the alrm1 relay get enrgise)

press *MORE* key

ALARM 1 STATUS **ZERO VOLTAGE : NIL** **ZERO CURRENT : NIL**	Zero voltage and Zero current alarm for alarm relay1

press *MORE* key

ALARM 2 STATUS **NO OVER COMPEN.** **NO UNDER COMPEN.**	Over compensation and Under compensation alarm for alarm relay2

press *MORE* key

ALARM 2 STATUS **VOLTAGE THD : NIL** **CURRENT THD : NIL**	Voltage THD and Current THD alarm for alarm relay2

Page 4 (Selected Through Mode Key)

```
STEP-01  HISTORY
COUNT   :      10
RUN HR  :   10:10
```

No. of switching cycle and total switch ON time for capacitor bank1

▲\▼ key

```
STEP-02  HISTORY
COUNT   :      10
RUN HR  :   10:09
```

No. of switching cycle and total switch ON time for capacitor bank2

▲\▼ key

⋮

▲\▼ key

```
STEP-16  HISTORY
COUNT   :      10
RUN HR  :   10:01
```

No. of switching cycle and total switch ON time for capacitor bank16

8. Program mode display pages

Page 1 (Selected Through Mode Key)

METERING SETUP

NEW PASS WORD
0 0 0 0

Password to protect unauthorized person entry *(Range : 0000 - 9999)*

▲\▼ key

METERING SETUP
OPERATING
VOLTAGE
4 1 5

System rated Voltage
(Range : 350 - 525V)

▲\▼ key

METERING SETUP
GRID PRIMARY
CURRENT SET
1 0 0 0

Primary Current setting of CT used to measure Grid Current
(Range : 0000 - 9999A)

▲\▼ key

METERING SETUP
PANEL PRIMARY
CURRENT SET
1 0 0 0

Primary Current setting of CT used to measure Panel Current
(Range : 0000 - 9999A)

▲\▼ key

METERING SETUP **LCD POWER SAVE** **DISABLED**

LCD Power save Enabled/Disabled is selected using Shift or Increment key and pressing Enter key. *(If it is Enabled, then backlit is automatically switched off when there is no any key press for 3 minutes.Pressing any key will make backlit ON. If LCD power save is Disabled, then backlit is switched on permanently)*

▲\▼ key

METERING SETUP **ENERGY** **RESET SURE** **ENERGY CLEARED**

Energy reset for grid and panel energy

Page 2 (Selected Through Mode Key)

CONTROL SETUP **PF SETPOINT** **1. 0 0**

Target PF setting
(Range : 0.80LG to 0.91 LD)

▲\▼ key

CONTROL SETUP **CONNECTION DELAY** **0 2**

Delay for connecting the Capacitor banks *(Range : 00 - 99 sec)*

▲\▼ key

CONTROL SETUP
RECONNECTION
DELAY
0 3 0

Delay for reconnecting the Capacitor bank *(Range : 000 - 999 sec)*

▲\▼ key

CONTROL SETUP

NUMBER OF BANKS
1 6

Total number of banks available *(Range : 01 - 16)*

▲\▼ key

CONTROL SETUP
RATING OF FIRST
BANK IN kVAr
5 0. 0

Rating (kVAr) of the first Capacitor bank available in the panel *(Range : 00.0 - 99.9 kVAr)*

▲\▼ key

CONTROL SETUP
OPERATION
SEQUENCE
1:1:1:1:1

Operation sequence for control action to be selected depending on the value of capacitor banks used in the panel *(Sequence : 1:1:1:1:1, 1:1:2:2:2, 1:2:2:2:2, 1:2:4:4:4, 1:2:4:8:8)*

▲\▼ key

CONTROL SETUP **BANK HISTORY** **RESET** **0 1**

Reset capacitor switching cycle counter and capacitor run hour counter for a particular bank

Page 3 (Selected Through Mode Key)

ALARM SETUP **OVER VOLTAGE** **SET IN %** **1 2 0**

Over voltage setting in percentage of system voltage
(Range : 102 - 120%)

▲\▼ key

ALARM SETUP **OVER CURRENT** **SET IN %** **1 1 0**

Over current setting in percentage of grid primary current set
(Range : 100 - 120%)

▲\▼ key

ALARM SETUP **VOLTAGE THD** **SET IN %** **1 0**

Total Harmonic Distortion setting of voltage in percentage
(Range : 00 - 20%)

▲\▼ key

ALARM SETUP **CURRENT THD** **SET IN %** **5 0**

Total Harmonic Distortion setting of current in percentage
(Range : 00 - 50%)

Again pressing the Mode, Increment & Decrement key will repeat the same cycle.

9.Technical Specifications

Type	:	**ICD's POWER FACTOR CONTROLLER**
Model No	:	PFC 9070
Voltage Input	:	3 Phase 415V AC
Burden	:	Less than 0.2 A
Frequency	:	40.00 to 60.00HZ
Current input	:	1A / 5A (ordering option) 3CT's for Grid and Panel
PF measurement range	:	For all 4 Quadrants.
PF measurement Accuracy	:	± 1% (+2 least digits)
PF indicating Resoluton	:	0.001 PF
PF setting range	:	0.80 lag to 0.91 lead
PF setting Resolution	:	0.01 PF
Display	:	4 Row 16 character LCD display with Backlit
Parameter Displayed		
	:	Actual PF, Set PF, kVAr required, Voltage, Current, HZ, kW, kVA, kVAr, kWh, kVAh, kVArh, VTHD, ITHD & Avg. PF

Alarm status	**:**	ALR1- critical alarm ALR2- Non ciritical alarm
Step history for each step	**:**	Switching cycle count & Run Hour
Posssible programmble Sequence of capacitor banks	:	1 :1 :1 :1 :1 1 :1 :2 :2 :2 1 :2 :2 :2 :2 1 :2 :4 :4 :4 1 :2 :4 :8 :8
Number of steps output	:	8 Banks max. (Programmable)
Output	:	Relay Output
Auxiliary supply	:	90 - 270V AC RMS
Capacitor connection delay	:	01 to 99 seconds adjustable
Reconnection delay	:	001 to 999 seconds adjustable
Control operation	**:**	a) Switching in when the lag requiredKVAr value is more than 70% of the 1st capacitor value. b) Switching out when the lead required KVAr value is more than 70% of the 1st capacitor value.
Alaram relay output	:	For the above protection conditions aralm relay is ON

Output Relay	:	NO contact
Contact rating	:	3A at 230VAC
Control outputs	:	a) Over voltage b) Over current c) Zero voltage d) Zero current e) Under compensation f) Over compensation g) V_{THD} h) I_{THD}
Output Relay ON, Auto and Manual mode	:	By led indication
Operating Temperature	:	55 deg. C
Enclosure Dimension	:	a) Bezel 144(H) X 144(W) mm b) Cut out 136(H) X 136(W) mm c) Depth 80 mm